Cambridge International AS & A Level

Cambridge International Examinations
Cambridge International Advanced Subsidiary and Advanced Level

CANDIDATE NAME	
CENTRE NUMBER	
CANDIDATE NUMBER	

0123456789

PHYSICS **9702/02**

Paper 2 AS Level Structured Questions **For Examination from 2016**

SPECIMEN PAPER

1 hour 15 minutes

Candidates answer on the Question Paper.

No Additional Materials are required.

READ THESE INSTRUCTIONS FIRST

Write your Centre number, candidate number and name on all the work you hand in.
Write in dark blue or black pen.
You may use an HB pencil for any diagrams or graphs.
Do not use staples, paper clips, glue or correction fluid.
DO **NOT** WRITE IN ANY BARCODES.

Answer **all** questions.

Electronic calculators may be used.
You may lose marks if you do not show your working or if you do not use appropriate units.

At the end of the examination, fasten all your work securely together.
The number of marks is given in brackets [ ] at the end of each question or part question.

This document consists of **16** printed pages.

© UCLES 2014

CAMBRIDGE International Examinations

[Turn over

Data

speed of light in free space	$c = 3.00 \times 10^{8}\ \text{m s}^{-1}$
permeability of free space	$\mu_0 = 4\pi \times 10^{-7}\ \text{H m}^{-1}$
permittivity of free space	$\varepsilon_0 = 8.85 \times 10^{-12}\ \text{F m}^{-1}$
	$(\frac{1}{4\pi\varepsilon_0} = 8.99 \times 10^{9}\ \text{m F}^{-1})$
elementary charge	$e = 1.60 \times 10^{-19}\ \text{C}$
the Planck constant	$h = 6.63 \times 10^{-34}\ \text{J s}$
unified atomic mass unit	$1\ \text{u} = 1.66 \times 10^{-27}\ \text{kg}$
rest mass of electron	$m_e = 9.11 \times 10^{-31}\ \text{kg}$
rest mass of proton	$m_p = 1.67 \times 10^{-27}\ \text{kg}$
molar gas constant	$R = 8.31\ \text{J K}^{-1}\ \text{mol}^{-1}$
the Avogadro constant	$N_A = 6.02 \times 10^{23}\ \text{mol}^{-1}$
the Boltzmann constant	$k = 1.38 \times 10^{-23}\ \text{J K}^{-1}$
gravitational constant	$G = 6.67 \times 10^{-11}\ \text{N m}^2\ \text{kg}^{-2}$
acceleration of free fall	$g = 9.81\ \text{m s}^{-2}$

© UCLES 2014

Formulae

uniformly accelerated motion	$s = ut + \frac{1}{2}at^2$ $v^2 = u^2 + 2as$
work done on/by a gas	$W = p\Delta V$
gravitational potential	$\phi = -\frac{Gm}{r}$
hydrostatic pressure	$p = \rho gh$
pressure of an ideal gas	$p = \frac{1}{3}\frac{Nm}{V}\langle c^2 \rangle$
simple harmonic motion	$a = -\omega^2 x$
velocity of particle in s.h.m.	$v = v_0 \cos \omega t$ $v = \pm \omega \sqrt{(x_0^2 - x^2)}$
Doppler effect	$f_o = \frac{f_s v}{v \pm v_s}$
electric potential	$V = \frac{Q}{4\pi\varepsilon_0 r}$
capacitors in series	$1/C = 1/C_1 + 1/C_2 + \ldots$
capacitors in parallel	$C = C_1 + C_2 + \ldots$
energy of charged capacitor	$W = \frac{1}{2}QV$
electric current	$I = Anvq$
resistors in series	$R = R_1 + R_2 + \ldots$
resistors in parallel	$1/R = 1/R_1 + 1/R_2 + \ldots$
Hall voltage	$V_H = \frac{BI}{ntq}$
alternating current/voltage	$x = x_0 \sin \omega t$
radioactive decay	$x = x_0 \exp(-\lambda t)$
decay constant	$\lambda = \frac{0.693}{t_{\frac{1}{2}}}$

© UCLES 2014

[Turn over

Answer **all** the questions in the spaces provided.

1 **(a)** **(i)** State the SI base units of volume.

base units of volume ..... [1]

(ii) Show that the SI base units of pressure are $\text{kg m}^{-1}\text{ s}^{-2}$.

[1]

(b) The volume V of liquid that flows through a pipe in time t is given by the equation

$$\frac{V}{t} = \frac{\pi P r^4}{8Cl}$$

where P is the pressure difference between the ends of the pipe of radius r and length l. The constant C depends on the frictional effects of the liquid.

Determine the base units of C.

base units of C ..... [3]

[Total: 5]

© UCLES 2014

2 A climber is supported by a rope on a vertical wall, as shown in Fig. 2.1.

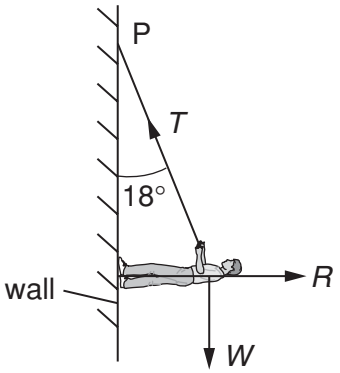

Fig. 2.1

The weight *W* of the climber is 520 N. The rope, of negligible weight, is attached to the climber and to a fixed point P where it makes an angle of 18° to the vertical. The reaction force *R* acts at right angles to the wall.
The climber is in equilibrium.

(a) Complete Fig. 2.2 by drawing a labelled vector triangle to represent the forces acting on the climber.



Fig. 2.2

[2]

(b) Resolve forces or use your vector triangle to calculate

(i) the tension T in the rope,

T = ... N [2]

(ii) the reaction force R.

R = ... N [1]

(c) The climber moves up the wall and the angle the rope makes with the vertical increases. Explain why the magnitude of the tension in the rope increases.

.....

.....

..... [1]

[Total: 6]

© UCLES 2014

3 **(a)** Explain what is meant by *work done*.

.....

..... [1]

(b) A car is travelling along a road that has a uniform downhill gradient as shown in Fig. 3.1.

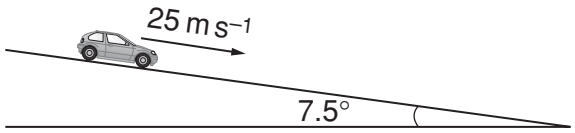

Fig. 3.1

The car has a total mass of 850 kg. The angle of the road to the horizontal is 7.5°.

Calculate the component of the weight of the car down the slope.

component of weight = ... N [2]

(c) The car in **(b)** is travelling at a constant speed of 25 m s^{-1}. The driver then applies the brakes to stop the car. The constant force resisting the motion of the car is 4600 N.

(i) Show that the deceleration of the car with the brakes applied is 4.1 m s^{-2}.

[2]

(ii) Calculate the distance the car travels from when the brakes are applied until the car comes to rest.

distance = ... m [2]

© UCLES 2014

(iii) Calculate

1. the loss of kinetic energy of the car,

loss of kinetic energy = ... J

2. work done by the resisting force of 4600 N.

work done = ... J
[3]

(iv) The quantities in **(iii) part 1** and in **(iii) part 2** are not equal. Explain why these two quantities are not equal.

.....

..... [1]

[Total: 11]

© UCLES 2014

4 **(a)** Define the *torque* of a couple.

.....

..... [2]

(b) A uniform rod of length 1.5 m and weight 2.4 N is shown in Fig. 4.1.

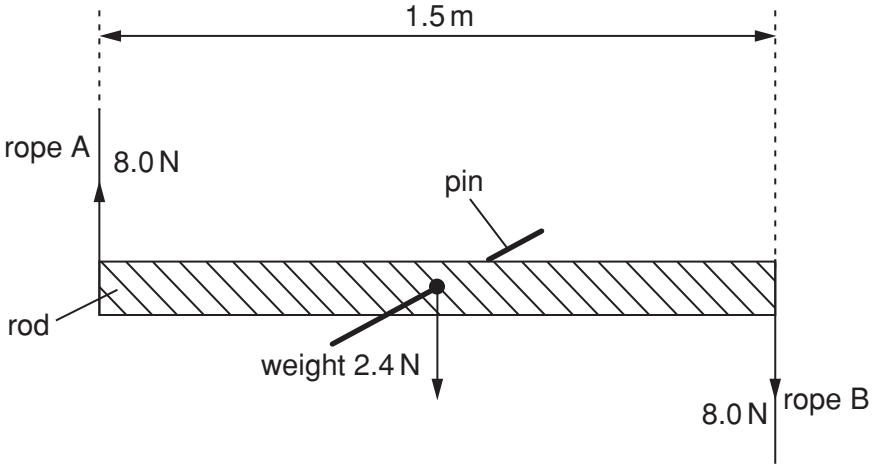

Fig. 4.1

The rod is supported on a pin passing through a hole in its centre. Ropes A and B provide equal and opposite forces of 8.0 N.

(i) Calculate the torque on the rod produced by ropes A and B.

torque = ... N m [1]

(ii) Discuss, briefly, whether the rod is in equilibrium.

.....

.....

.....

..... [2]

[Total: 5]

5 Fig. 5.1 shows a 12 V power supply with negligible internal resistance connected to a uniform metal wire AB. The wire has length 1.00 m and resistance 10 Ω. Two resistors of resistance 4.0 Ω and 2.0 Ω are connected in series across the wire.

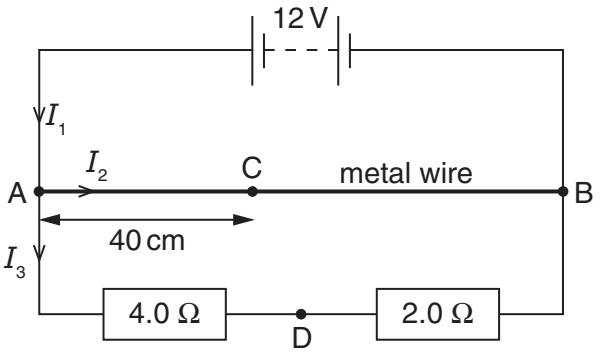

Fig. 5.1

Currents I_1, I_2 and I_3 in the circuit are as shown in Fig. 5.1.

(a) (i) Use Kirchhoff's first law to state a relationship between I_1, I_2 and I_3.

..... [1]

(ii) Calculate I_1.

I_1 = ... A [3]

(iii) Calculate the ratio *x*, where

$$x = \frac{\text{power in metal wire}}{\text{power in series resistors}}.$$

x = ... [3]

(b) Calculate the potential difference (p.d.) between the points C and D, as shown in Fig. 5.1. The distance AC is 40 cm and D is the point between the two series resistors.

p.d. = ... V [3]

[Total: 10]

© UCLES 2014

6 **(a)** State Hooke's law.

.....

..... [1]

(b) The variation in extension x with force F for a spring is shown in Fig. 6.1.

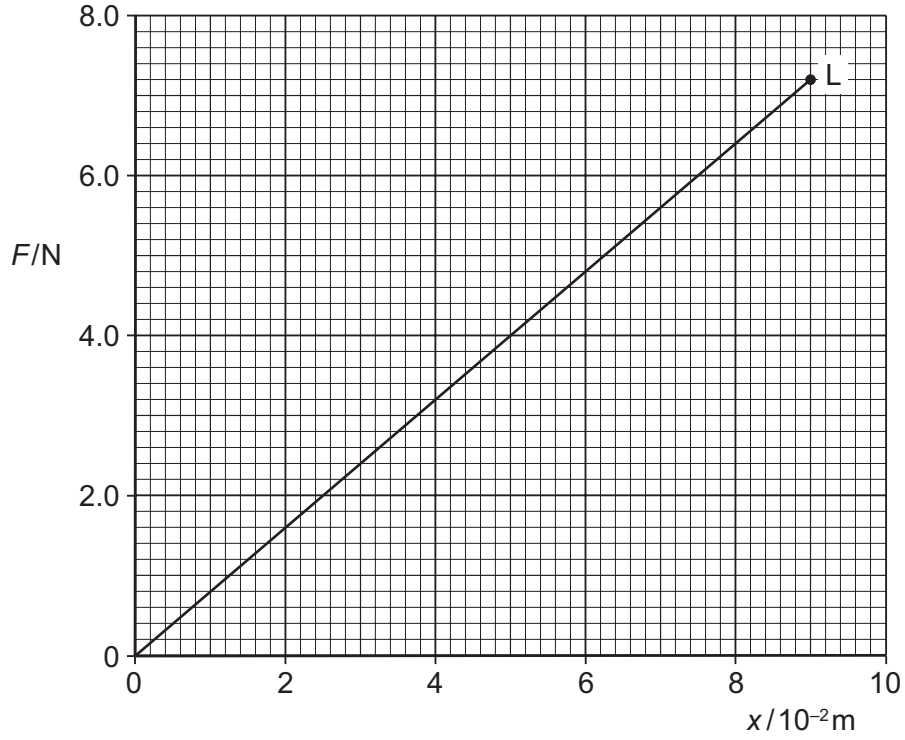

Fig. 6.1

The point L on the graph is the elastic limit of the spring.

(i) Describe the meaning of *elastic limit*.

.....

.....

..... [1]

(ii) Calculate the spring constant k for the spring.

k = ... $N\,m^{-1}$ [1]

(iii) Calculate the work done extending the spring with a force of 6.4 N.

work done = ... J [2]

[Total: 5]

© UCLES 2014

7 **(a)** A transverse progressive wave travels along a stretched string from left to right. The shape of part of the string at a particular instant is shown in Fig. 7.1.

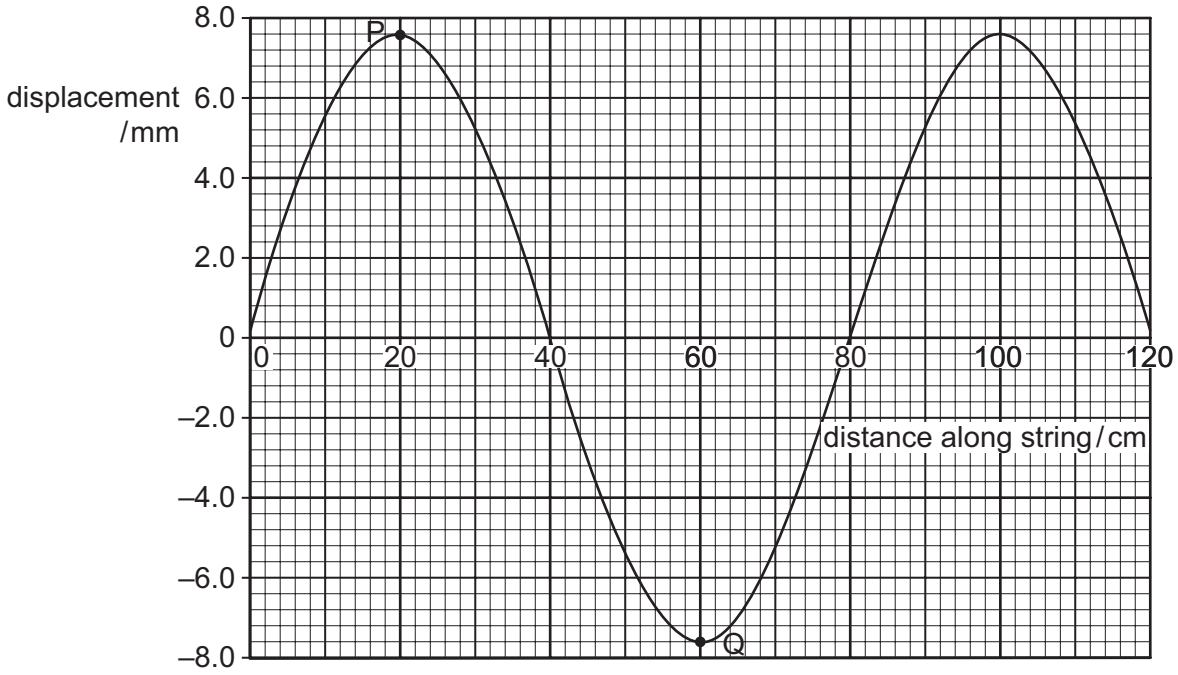

Fig. 7.1

The frequency of the wave is 15 Hz.

For this wave, use Fig. 7.1 to determine

(i) the amplitude,

amplitude = ... mm [1]

(ii) the phase difference between the points P and Q on the string,

phase difference = ... [1]

(iii) the speed of the wave.

speed = ... $m\,s^{-1}$ [2]

© UCLES 2014

(b) Another stretched string is used to form a stationary wave. Part of this wave at a particular instant is shown in Fig. 7.2.

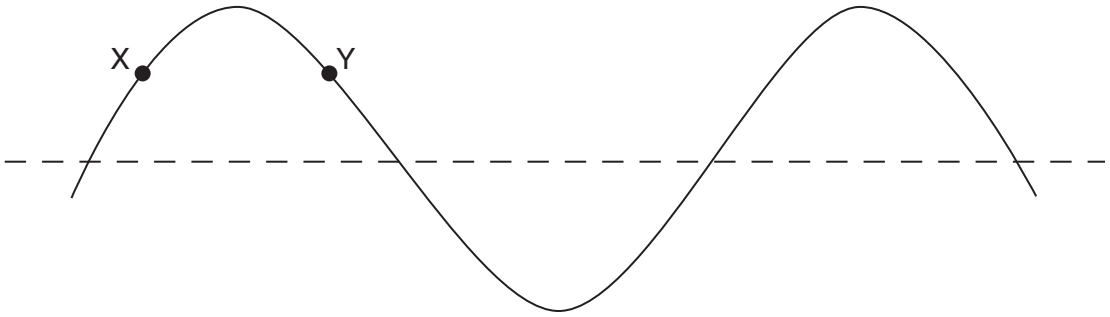

Fig. 7.2

The points on the string are at their maximum displacement.

(i) State the phase difference between the particles labelled X and Y.

phase difference = ... [1]

(ii) Explain the following terms used to describe stationary waves on a string.

antinode: .....

node: .....
[1]

(iii) State the number of antinodes shown on Fig. 7.2 for this wave.

number of antinodes = ... [1]

(iv) The period of vibration of this wave is 20 ms. On Fig. 7.2, sketch the stationary wave 10 ms after the instant shown in Fig. 7.2. [1]

[Total: 8]

© UCLES 2014

8 **(a)** Describe the Doppler effect.

.....

.....

..... [1]

(b) An observer stands on a bridge above a railway track as a train approaches at a constant speed of $44\,m\,s^{-1}$. The train continuously sounds a whistle which has a frequency of 880 Hz. The speed of sound in air is $340\,m\,s^{-1}$.

Calculate the frequency heard by the observer as the train

(i) approaches,

frequency = ... Hz [2]

(ii) recedes.

frequency = ... Hz [1]

[Total: 4]

© UCLES 2014

[Turn over

9 **(a)** State the class of particles which includes protons and neutrons.

..... [1]

(b) A proton inside a nucleus decays into a neutron. Write an equation to represent this decay.

[3]

(c) State the composition of a proton in terms of quarks.

..... [1]

(d) Describe the decay of the proton in **(b)** in terms of quarks.

..... [1]

[Total: 6]

Permission to reproduce items where third-party owned material protected by copyright is included has been sought and cleared where possible. Every reasonable effort has been made by the publisher (UCLES) to trace copyright holders, but if any items requiring clearance have unwittingly been included, the publisher will be pleased to make amends at the earliest possible opportunity.

Cambridge International Examinations is part of the Cambridge Assessment Group. Cambridge Assessment is the brand name of University of Cambridge Local Examinations Syndicate (UCLES), which is itself a department of the University of Cambridge.

© UCLES 2014